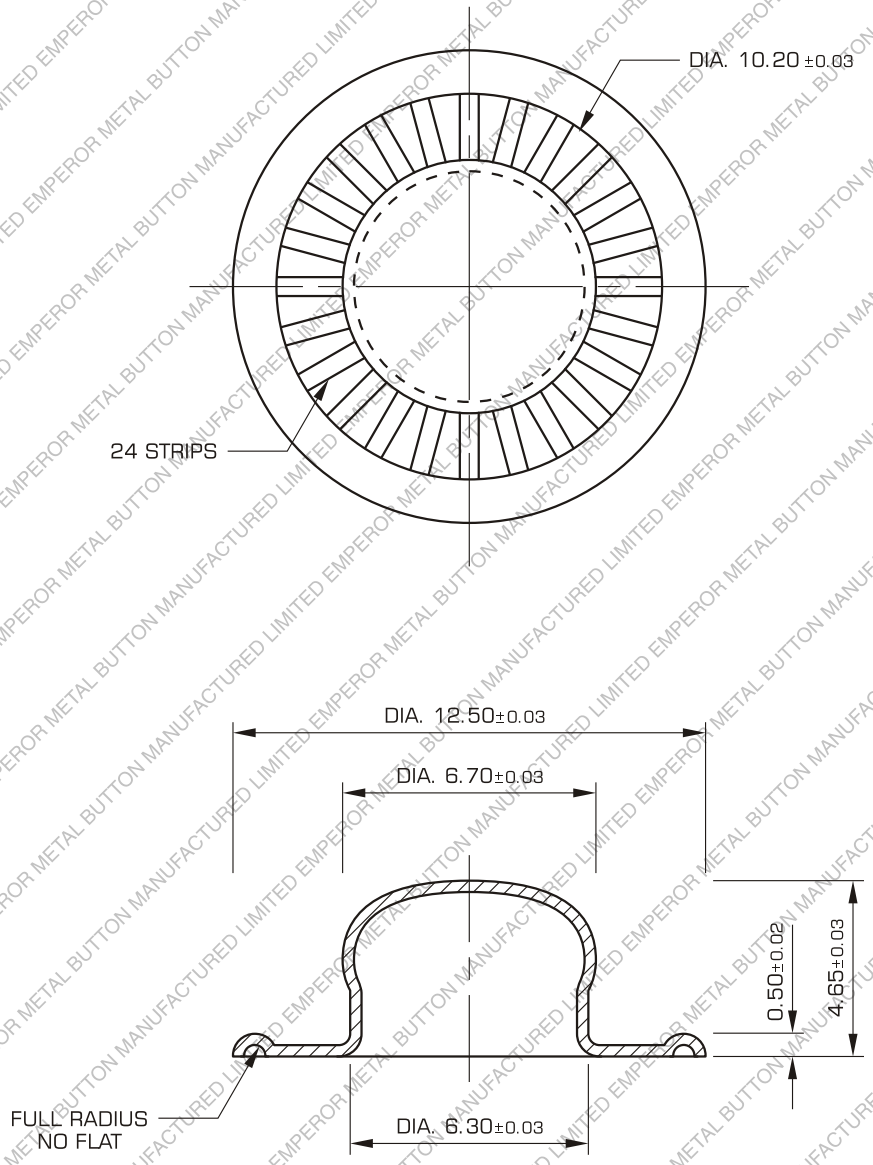

ITS TEST REPORT

ELECTROPLATING TEST REPORT

TITLE

482 C PART

MATERIAL
0.30
BRASS

HARDNESS

SCALE
5 : 1

SHEET NO.
1 OF 1

EMPEROR

METAL BUTTON MFY. LTD.

UNLESS OTHERWISE SPECIFIED

DIM	MM ±	DIM	MM ±	ANGLE ±
.00	.2	.00	.02	

EMPEROR METAL BUTTON MANUFACTURED LIMITED